☐ Model 4781-15 — Surface-Mounted
Bradex®

☑ Standard Series — Satin Finish

Product Materials

COVER: 22 gauge stainless steel with exposed surfaces in architectural satin finish. Heavy-duty stainless steel piano hinge.

CONTAINER: 22 gauge stainless steel with exposed surfaces in architectural satin finish. All welded construction with rounded front corners. Bottom equipped with lock and heavy-duty stainless steel piano hinge.

Operation

Bottom opens for removal of waxed paper liner. Box of 500 waxed paper liners are available by ordering part number P11-022

Installation

Verify all rough-in dimensions prior to installation. Secure to wall or partition with mounting screws (included) at holes provided.

Guide Specification

Surface-mounted napkin disposal shall be fabricated of 22 gauge stainless steel with exposed surfaces in satin finish. Top attached by piano hinge. Bottom hinged for easy servicing.

Overall dimensions: 8"W x 11½"H x 4⅛"D.

ADA Compliant

☑ Consult local and national accessibility codes for proper installation guidelines.

☑ Conformity and compliance to local and national codes is the responsibility of the installer.

Dim. "A" Key Surface:	For Dim. "A"	Top of Unit	Bottom of Unit
Waste receptacle top lip to finished floor	40" (1016mm)	40" (1016mm)	28½" (724mm)
	36" (914mm)	36" (914mm)	24½" (622mm)
	32" (813mm)	32" (813mm)	20½" (521mm)
Rough wall opening:			
Surface Mount:	No rough opening, see overall dimensions		

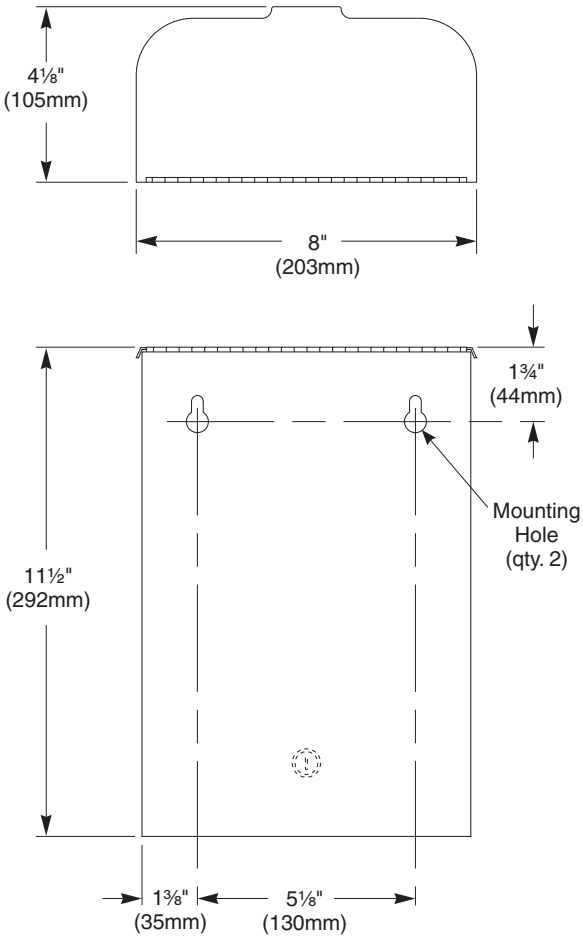

Orders composed of products indicated as **Bradex®** will be available to ship in three days after receipt of order at the factory. There is no pricing penalty for this service from Bradley.

This information is subject to change without notice.
Bradley_WasteReceptacle_4781-15

© 2014 Bradley
P.O. Box 309, Menomonee Falls, WI 53052-0309
800 BRADLEY (800 272 3539) +1 262 251 6000
bradleycorp.com